# PLANNING SUBMISSION

# 242 SPRUCE STREET
# ALBANY, NY

## CONVERSION OF EXISTING WAREHOUSE TO RESIDENTIAL APARTMENT BUILDING

242 SPRUCE STREET.
ALBANY, NY . 12210

TAX MAP NO. 65.72-4-24

DRAWING LIST:


| | |
|---|---|
| G001 | COVER SHEET |
| 1 OF 1 | SURVEY |
| S101 | LANDSCAPE PLAN |
| S102 | UTILITY PLAN |
| S103 | PARKING LOT SITE PLAN |
| S104 | PEDESTRIAN TRAFFIC PLAN |
| S105 | CONSTRUCTION ACCESS PLAN |
| S106 | WORK ZONE TRAFFIC CONTROL PLAN |
| S107 | MISC. DETAILS |

S 2 / 100 VIEW OF EXISTING BUIDLING –SPRUCE ST & HENRY J.
SCALE: N.T.S.

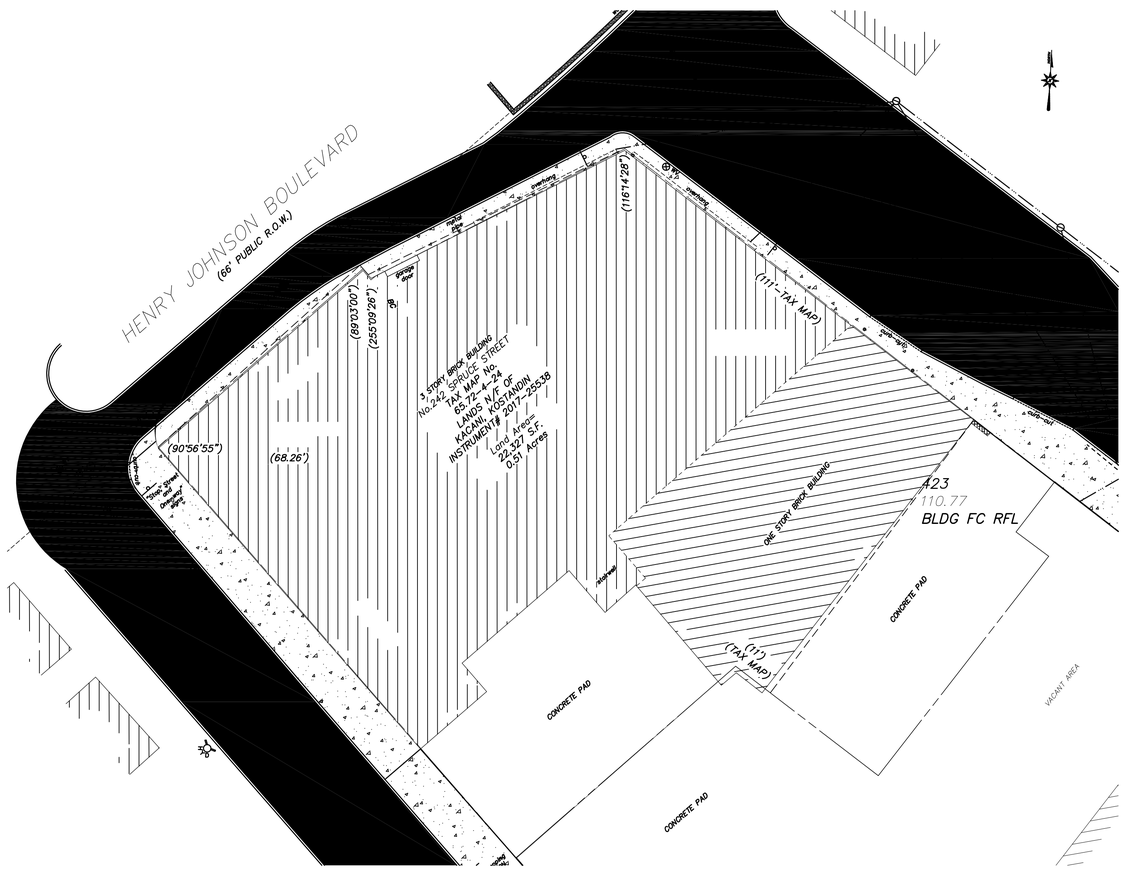


S 1 / 100 SITE PLAN
SCALE: N.T.S.

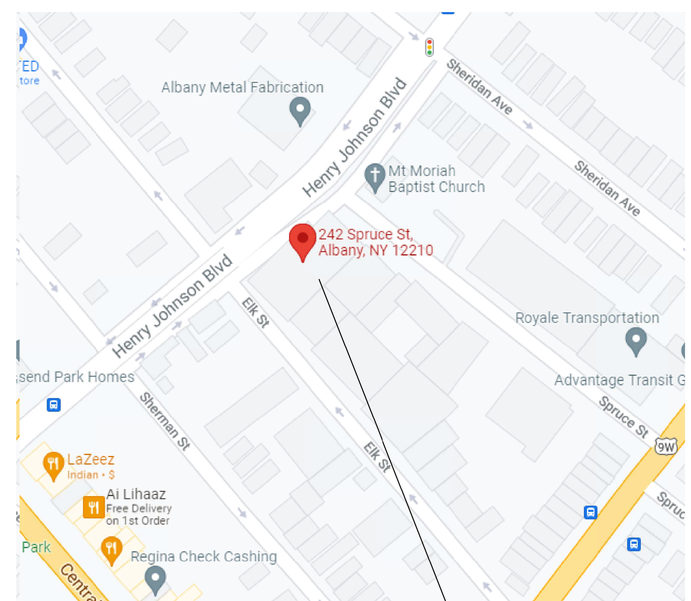


PROJECT LOCATION

S 3 / 100 LOCATION MAP
SCALE: N.T.S.


INFOCUS
ENGINEERING SERVICES
86-16 QUEENS BLVD SUITE Suite#205
ELMHURST, NEW YORK 11373
TEL.#: 718-233-2968
EMAIL: info@infocuspc.com www.infocuspc.com


NOTE:
INFOCUS WAS NOT RETAINED FOR ANY SUPERVISION OF THE ACTUAL CONSTRUCTION.

FOR OFFICE USE

| DATE | DESCRIPTION |
|---|---|

DOB JOB #'s:

Project location:
242 SPRUCE STREET
ALBANY, NY 12210

Project owner and address:
PROPOSED MULTI DWELLINGS RESIDENCE

Project name/description:

Drawing name:
COVER SHEET

seal and signature:
STATE OF NEW YORK · WU CHEN · 084996 · LICENSED PROFESSIONAL ENGINEER

| | |
|---|---|
| Date | 12-22-2021 |
| Project no: | 2012-03 |
| drawn by: | M.D. |
| chk by: | W.C. |
| Dwg. no: | G-100.00 |
| CAD FILE #: | PAGE #: 1 of 8 |

COPYRIGHT 2021 BY: INFOCUS

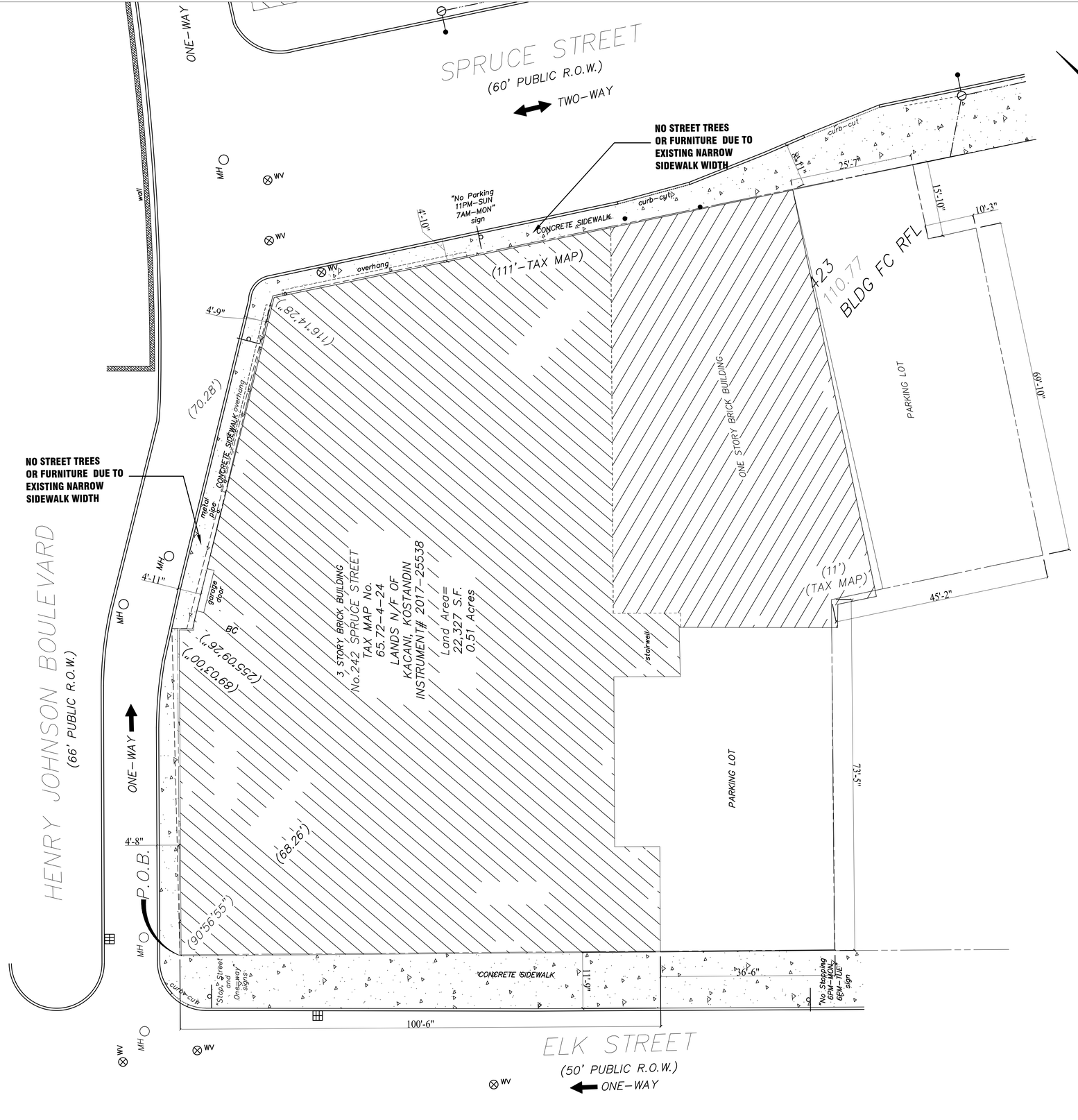


NOTE: NO TREE OR STREET FURNITURE ARE PROPOSED DUE TO EXISTING NARROW SIDEWALK WIDTH

C 1 / 100 NEW SITE PLAN
SCALE: 3/32" = 1'-0"

INFOCUS ENGINEERING SERVICES
86-16 QUEENS BLVD SUITE Suite#205
ELMHURST, NEW YORK 11373
TEL.#: 718-233-2968
EMAIL: info@infocuspc.com www.infocuspc.com

NOTE:
INFOCUS WAS NOT RETAINED FOR ANY SUPERVISION OF THE ACTUAL CONSTRUCTION.

FOR OFFICE USE

| DATE | DESCRIPTION |
|---|---|
| 2/24/22 | RESUBMISSION -2 |

DOB JOB #'s:

Project location:
242 SPRUCE STREET
ALBANY, NY 12210

Project owner and address:
PROPOSED MULTI DWELLINGS RESIDENCE

Project name/description:

Drawing name:
PROPOSED LANDSCAPE PLAN

seal and signature:
STATE OF NEW YORK · NU CHEN · 084996 · LICENSED PROFESSIONAL ENGINEER

| | |
|---|---|
| Date | 02-24-2022 |
| Project no: | 2012-03 |
| drawn by: | M.D. |
| chk by: | W.C. |
| Dwg. no: | S-101.00 |
| CAD FILE #: | PAGE #: 2 of 8 |

COPYRIGHT 2021 BY: INFOCUS

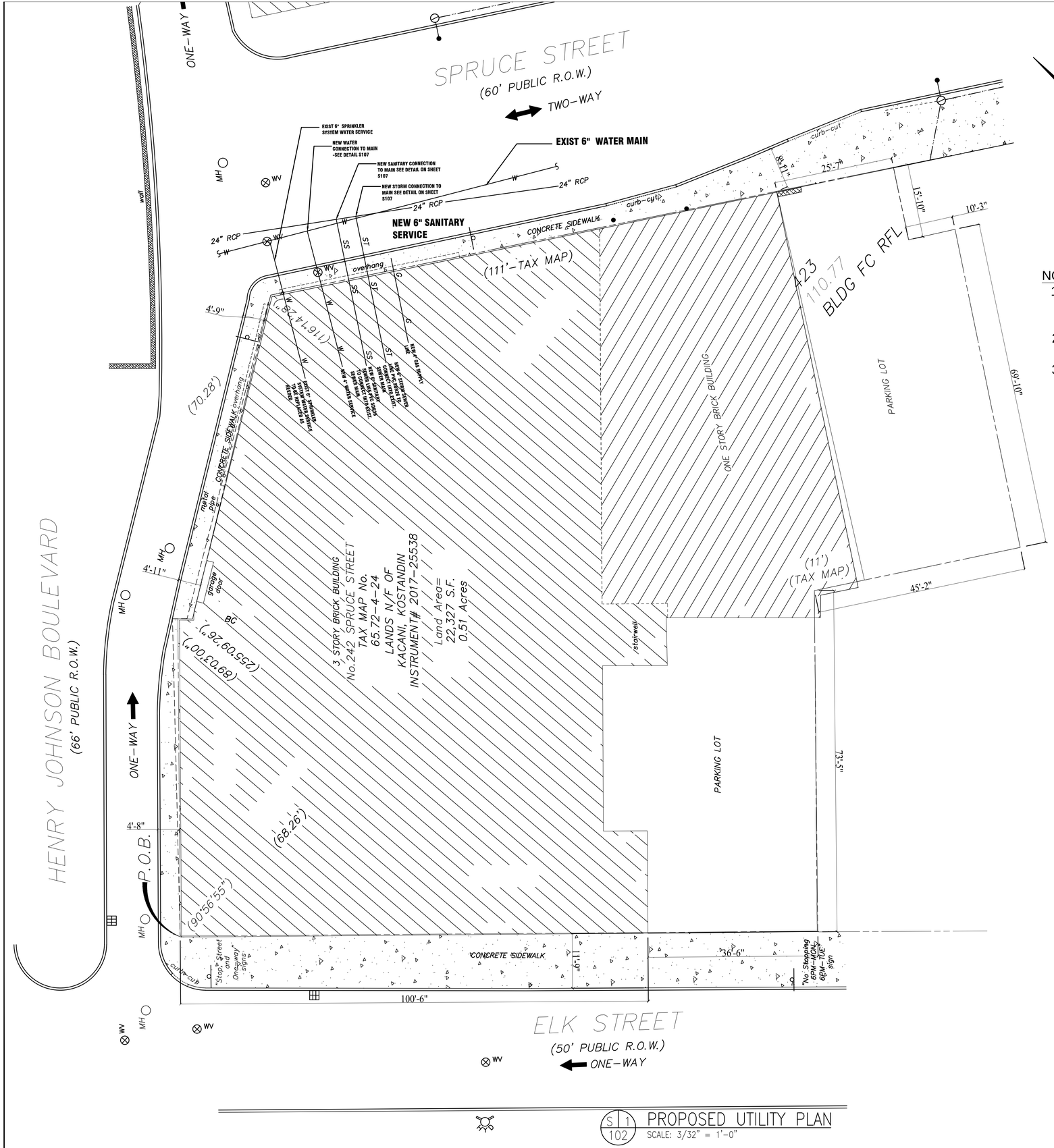


NOTES:

1. EXISTING ROOF LEADERS TO BE DISCONNECTED. CONNECT ALL ROOF LEADERS TO NEW STORM PIPE THAT EXITS THE BUILDING AND CONNECTS INTO EXISTING SEWER MAIN.
2. SEE SHEETS S105 &S106 FOR WORK ZONE TRAFFIC CONTROL AND DETAILS.
3. 48 HR NOTICE MUST BE GIVEN TO THE WATER DEPARTMENT PRIOR TO INSPECTIONS.

S 1 / 102 PROPOSED UTILITY PLAN

SCALE: 3/32" = 1'-0"

INFOCUS
ENGINEERING SERVICES
86-16 QUEENS BLVD SUITE Suite#205
ELMHURST, NEW YORK 11373
TEL.#: 718-233-2968
EMAIL: info@infocuspc.com www.infocuspc.com

NOTE:
INFOCUS WAS NOT RETAINED FOR ANY SUPERVISION OF THE ACTUAL CONSTRUCTION.

FOR OFFICE USE

| DATE | DESCRIPTION |
|---|---|
| 2/24/22 | RESUBMISSION -2 |

DOB JOB #'s:

Project location:
242 SPRUCE STREET
ALBANY, NY 12210

Project owner and address:
PROPOSED MULTI DWELLINGS RESIDENCE

Project name/description:

Drawing name:
PROPOSED UTILITY PLAN

seal and signature:

STATE OF NEW YORK · WU CHEN · 084998 · LICENSED PROFESSIONAL ENGINEER

| | |
|---|---|
| Date | 02-24-2022 |
| Project no: | 2012-03 |
| drawn by: | M.D. |
| chk by: | W.C. |
| Dwg. no: | S-102.00 |
| CAD FILE #: | PAGE #: 3 of 8 |

COPYRIGHT 2021 BY: INFOCUS

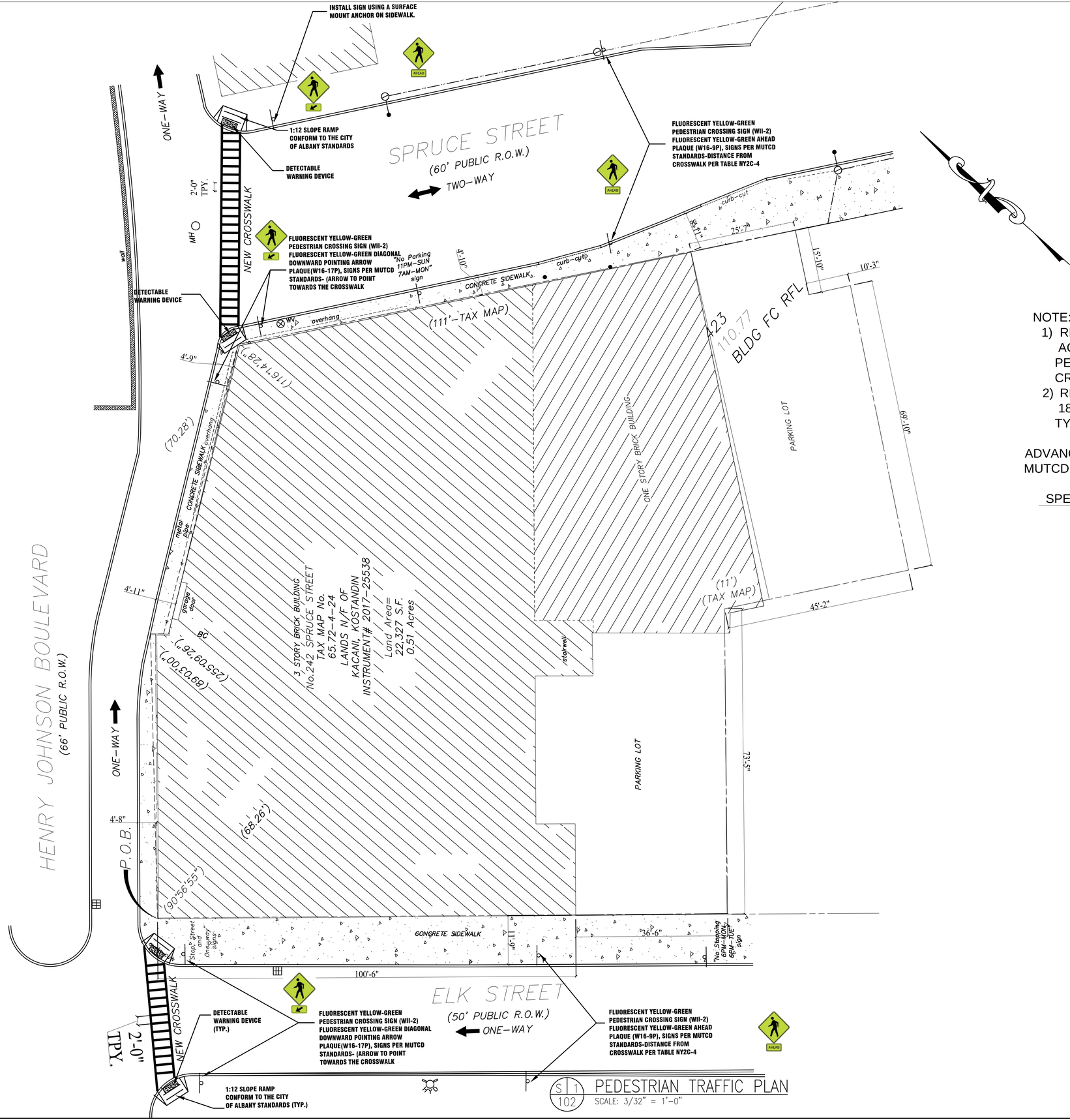


S 1
102

PEDESTRIAN TRAFFIC PLAN

SCALE: 3/32" = 1'-0"

NOTE:

1) REFERENCE NEW YORK STATE PEDESTRIAN SAFETY ACTION PLAN, APPENDIX A, UNCONTROLLED MARKED PEDESTRIAN CROSSWALKS, FOR BASIC TREATMENT AT CROSSWALK AND IN ADVANCE OF CROSSWALK.
2) REFERENCE NYSDOT HIGHWAY DESIGN MANUAL CHAPTER 18 PEDESTRIAN FACILITY DESIGN, FOR EXHIBIT 18-18, TYPICAL CROSSWALK MARKINGS.

ADVANCE PLACEMENT DISTANCE PER NYS SUPPLEMENT TO MUTCD, TABLE NY 2C-4

| SPEED (MPH) | DISTANCE (FT) |
|---|---|
| 20 | 115 |
| 25 | 155 |
| 30 | 200 |
| 35 | 250 |
| 40 | 305 |

INFOCUS
ENGINEERING SERVICES
86-16 QUEENS BLVD SUITE Suite#205
ELMHURST, NEW YORK 11373
TEL.#: 718-233-2968
EMAIL: info@infocuspc.com www.infocuspc.com

NOTE:
INFOCUS WAS NOT RETAINED FOR ANY SUPERVISION OF THE ACTUAL CONSTRUCTION.

FOR OFFICE USE

| DATE | DESCRIPTION |
|---|---|
| 2/24/22 | RESUBMISSION -2 |

DOB JOB #'s:

Project location:
242 SPRUCE STREET
ALBANY, NY 12210

Project owner and address:
PROPOSED MULTI DWELLINGS RESIDENCE

Project name/description:

Drawing name:
PEDESTRIAN TRAFFIC PLAN

seal and signature:

STATE OF NEW YORK
NU CHEN
084996
LICENSED PROFESSIONAL ENGINEER

| | |
|---|---|
| Date | 02-24-2022 |
| Project no: | 2012-03 |
| drawn by: | M.D. |
| chk by: | W.C. |
| Dwg. no: | S-103.00 |
| CAD FILE #: | PAGE #: 4 of 8 |

COPYRIGHT 2021 BY: INFOCUS

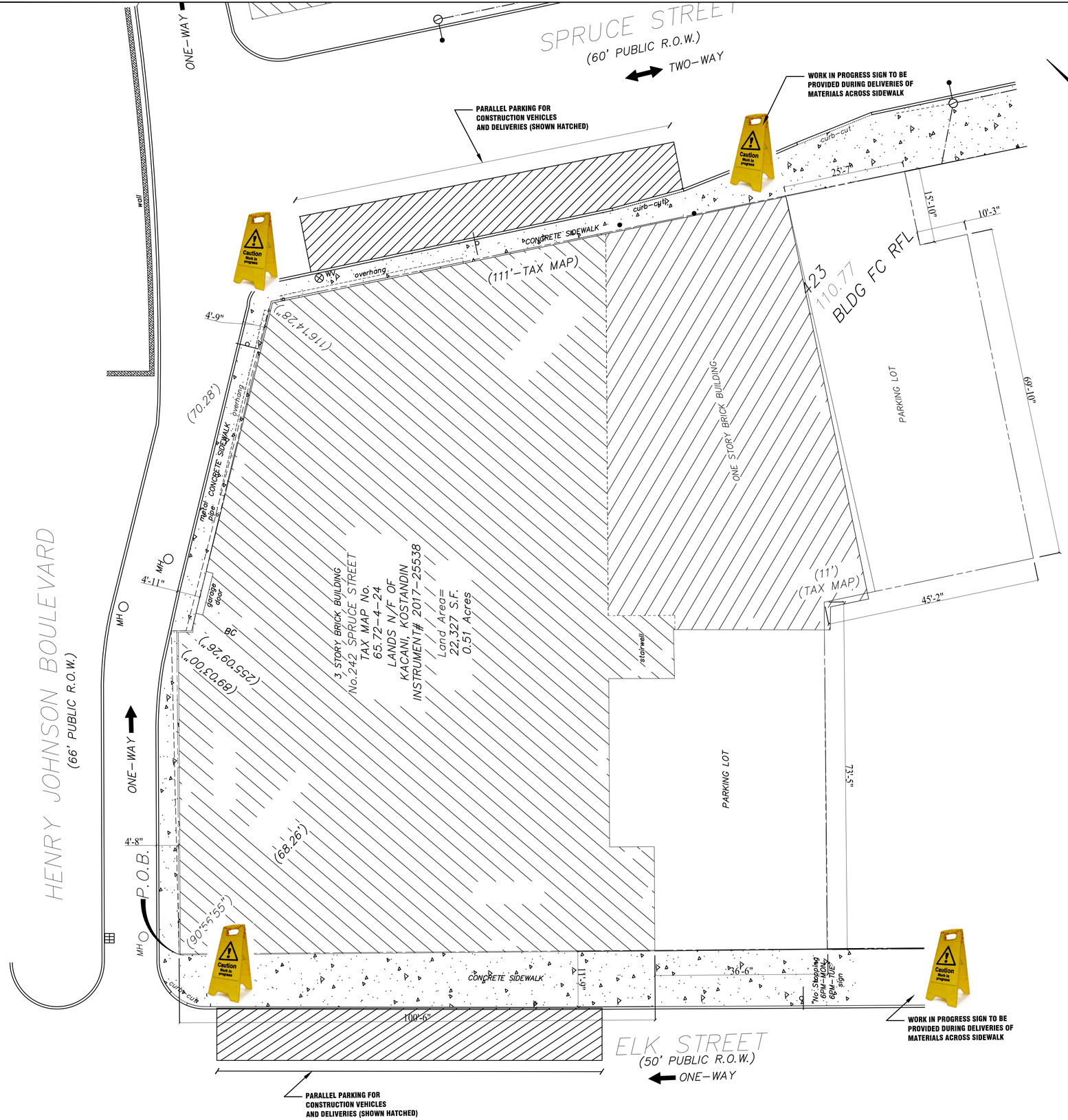


NOTE:

1) "TEMPORARY NO PARKING" SIGNAGE TO BE COORDINATED WITH AND INSTALLED BY THE CITY OF ALBANY DIVISION OF TRAFFIC ENGINEERING
2) DURING DELIVERIES AND MOVEMENT OF CONSTRUCTION MATERIALS IN AND OUT OF BUILDING, WORK IN PROGRESS SIGN TO BE PROVIDED TO NOTIFY PEDESTRIANS. MEMBER OF CONSTRUCTION CREW TO MANAGE SAFE MOVEMENT OF PEDESTRIANS.

S1 / 102 PEDESTRIAN TRAFFIC PLAN
SCALE: 3/32" = 1'-0"

INFOCUS ENGINEERING SERVICES
86-16 QUEENS BLVD SUITE Suite#205
ELMHURST, NEW YORK 11373
TEL.#: 718-233-2968
EMAIL: info@infocuspc.com www.infocuspc.com

NOTE:
INFOCUS WAS NOT RETAINED FOR ANY SUPERVISION OF THE ACTUAL CONSTRUCTION.

FOR OFFICE USE

| DATE | DESCRIPTION |
|---|---|
| 2/24/22 | RESUBMISSION -2 |

DOB JOB #'s:

Project location:
242 SPRUCE STREET
ALBANY, NY 12210

Project owner and address:
PROPOSED MULTI DWELLINGS RESIDENCE

Project name/description:

Drawing name:
CONSTRUCTION ACCESS PLAN

seal and signature:
STATE OF NEW YORK · WU CHEN · 084996 · LICENSED PROFESSIONAL ENGINEER

| | |
|---|---|
| Date | 02-24-2022 |
| Project no: | 2012-03 |
| drawn by: | M.D. |
| chk by: | W.C. |
| Dwg. no: | S-104.00 |
| CAD FILE #: | PAGE #: 5 of 8 |

COPYRIGHT 2021 BY INFOCUS

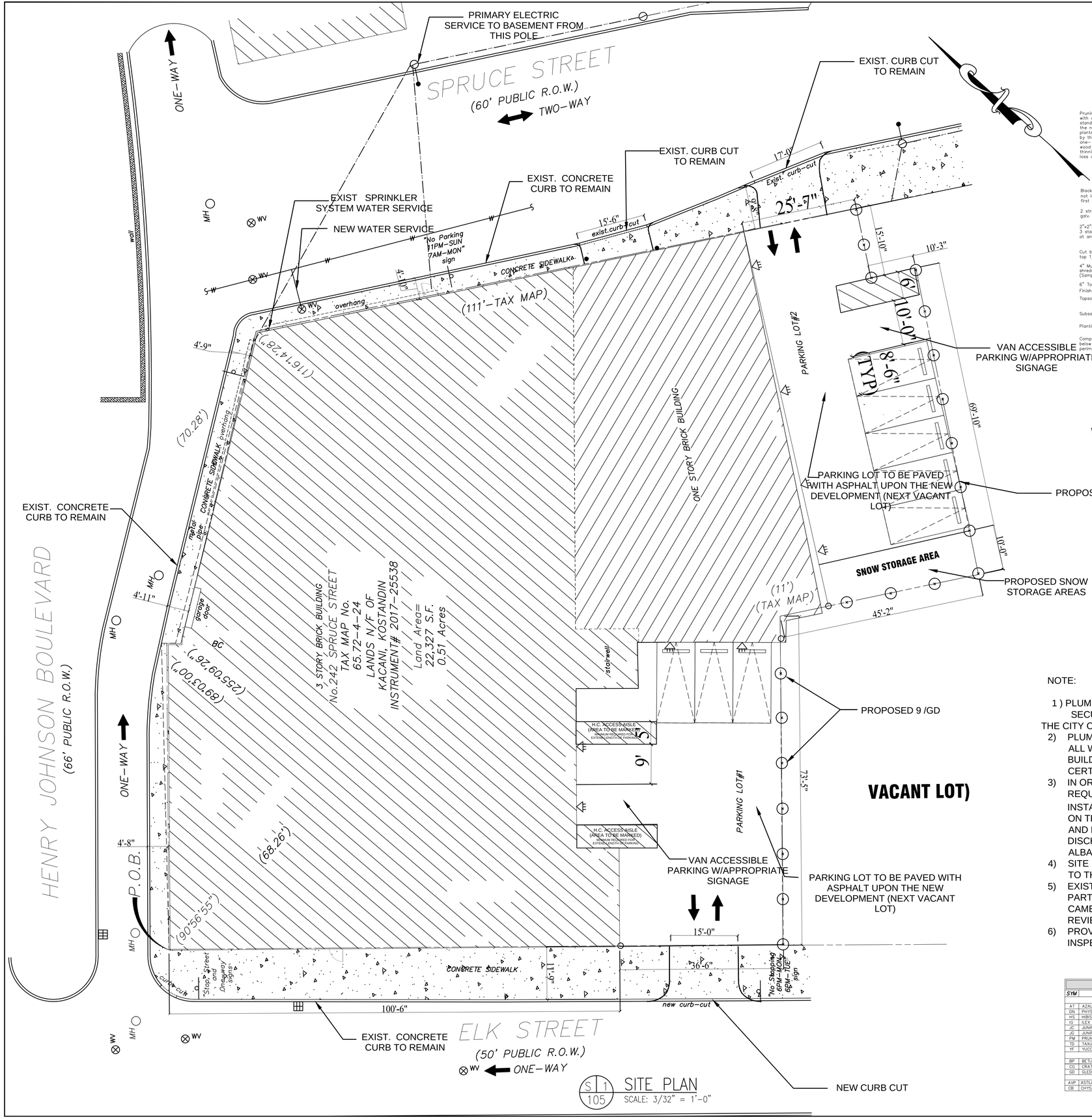


S1 105 SITE PLAN
SCALE: 3/32" = 1'-0"

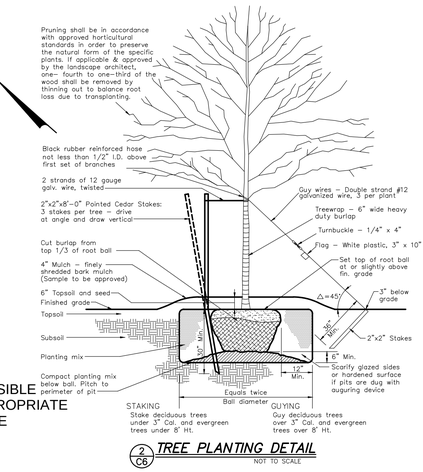


2 C6 TREE PLANTING DETAIL
NOT TO SCALE

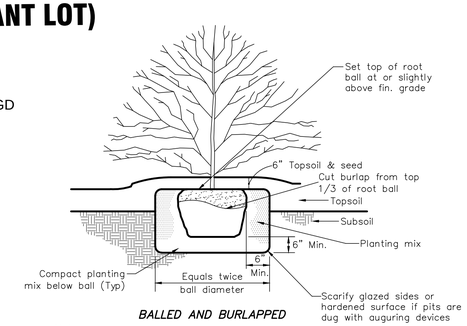


BALLED AND BURLAPPED

Notes:
1. Do not add fertilizer to planting mix for fall planting.

1 C6 SHRUB PLANTING DETAIL
NOT TO SCALE

NOTE:

1 ) PLUMBING CONTRACTOR IS RESPONSIBLE FOR APPLICATION FOR AN SECURING OF ALL WATER AND SEWER PERMITS AS REQUIRED BY THE CITY OF ALBANY.

2) PLUMBING CONTRACTOR SHALL BE RESPONSIBLE FOR ENSURING ALL WATER SUPPLY PIPING FROM THE CITY SERVICE TO THE BUILDING ENTRANCE IS LEAD FREE AND SHALL PROVIDED CERTIFICATION TO VALIDATE.

3) IN ORDER TO COMPLY WITH THE CITY STORM WATER MANAGEMENT REQUIREMENT S, ALL ROOF DRAINS SHALL BE MODIFIED WITH THE INSTALLATION OF A 1 1/4" DIAMETER ORIFICE TO RESTRICT RUNOFF. ON THE ROOF. ALL ROOF LEADERS SHALL BE DISCONNECTED FROM AND RUN SEPARATELY FROM THE SANITARY SEWER TO ONE DISCHARGE POINT PER THE REQUIREMENTS OF THE CITY OF ALBANY.

4) SITE DRAINAGE IS CURRENTLY AND SHALL REMAIN SHEET DRAINAGE TO THE EXISTING CATCH BASIN .

5) EXISTING SANITARY SEWER SYSTEM THAT REMAIN IN SERVICE AS PART OF THE COMPLETED PROJECT SHALL BE INSPECTED VIA VIDEO CAMERA WITH VIDEO SUBMITTED TO THE WATER DEPARTMENT FOR REVIEW AND ACCEPTANCE AS NEEDED.

6) PROVIDE 48 HOURS NOTICED TO THE WATER DEPARTMENT FOR ALL INSPECTIONS OF WATER, STORM , AND SANITARY SYSTEMS.

**PLANT MATERIAL SCHEDULE**

| SYM | BOTANICAL NAME | COMMON NAME | SIZE | AMT | COMMENTS |
|---|---|---|---|---|---|
| | | *SHRUBS* | | | |
| AT | AZALEA 'STEWARTSTONIAN' | STEWARTSTONIAN AZALEA | 18"-24" HT. | 28 | C.G. |
| DN | PHYSOCARPUS OPULIFOLIUS 'DART'S GOLD' | LITTLE DRAT NINEBARK | 18"-24" HT. | 30 | C.G |
| HS | HIBISCUS SINOSYRIACUS 'PINK GIANT' | ROSE OF SHARON 'PINK GIANT' | 4'-5' | 16 | B & B |
| IG | ILEX GLABRA | INKBERRY | 2 1/2" HT. | 14 | B & B |
| JC | JUNIPERUS CHINENSIS 'PFITZERIANA' | PFITZER JUNIPER | 3' SPREAD | 30 | B & B |
| JG | JUNIPERUS CHINENSIS 'SEA GREEN' | SEA GREEN JUNIPER | 18" HT. | 2 | C.G. |
| PM | PRUNUS MUGHUS MUGO 'SLOWMOUND' | MUGHO PINE | 5 GAL. | 63 | C.G. |
| TD | TAXUS X MEDIA 'DENSIFORMIS' | DENSE SPREADING YEW | 24" HT. | 75 | B & B |
| YF | YUCCA FILAMENTOS G "GOLDEN SWORD" | YUCCA | 18"-24" HT. | 23 | C.G. |
| | | *TREES* | | | |
| BP | BETULA PAPYRIFERA | CANOE BIRCH | 8'-10' HT.(HVY CLUMP) | 8 | B & B |
| CG | CRATAEGUS CRUSGALLI VAR. INERMIS | THORNLESS COCKSPUR HAWTHORN | 2"-2 1/2" CAL. | 9 | B & B |
| GD | GLEDITSIA TRIACANTHOS INERMIS 'SUNBURST' | SUNBURST HONEYLOCUST | 2 1/2"-3" CAL. | 24 | B & B |
| | | *PERENNIALS* | | | |
| AVP | ASTILBE "VISIONS IN PINK' | VISION IN PINK ASTILBE | 2 GAL. | 11 | C.G. |
| CB | CHYSANTHENUM SUPERBUM "ALASKA" | SHASTA DAISY | 1 GAL. | 6 | C.G. |


INFOCUS ENGINEERING SERVICES
86-16 QUEENS BLVD SUITE Suite#205
ELMHURST, NEW YORK 11373
TEL.#: 718-233-2968
EMAIL: info@infocuspc.com www.infocuspc.com


NOTE:
INFOCUS WAS NOT RETAINED FOR ANY SUPERVISION OF THE ACTUAL CONSTRUCTION.

FOR OFFICE USE

| DATE | DESCRIPTION |
|---|---|
| 2/24/22 | RESUBMISSION -2 |

DOB JOB #'s:

Project location:
242 SPRUCE STREET
ALBANY, NY 12210

Project owner and address:
PROPOSED MULTI DWELLINGS RESIDENCE

Project name/description:

Drawing name:
SITE PLAN

seal and signature:

STATE OF NEW YORK · WU CHEN · 084998 · LICENSED PROFESSIONAL ENGINEER

| | |
|---|---|
| Date | 02-24-2022 |
| Project no: | 2012-03 |
| drawn by: | M.D. |
| chk by: | W.C. |
| Dwg. no: | S-105.00 |
| CAD FILE #: | PAGE #: 6 of 8 |

COPYRIGHT 2021 BY: INFOCUS

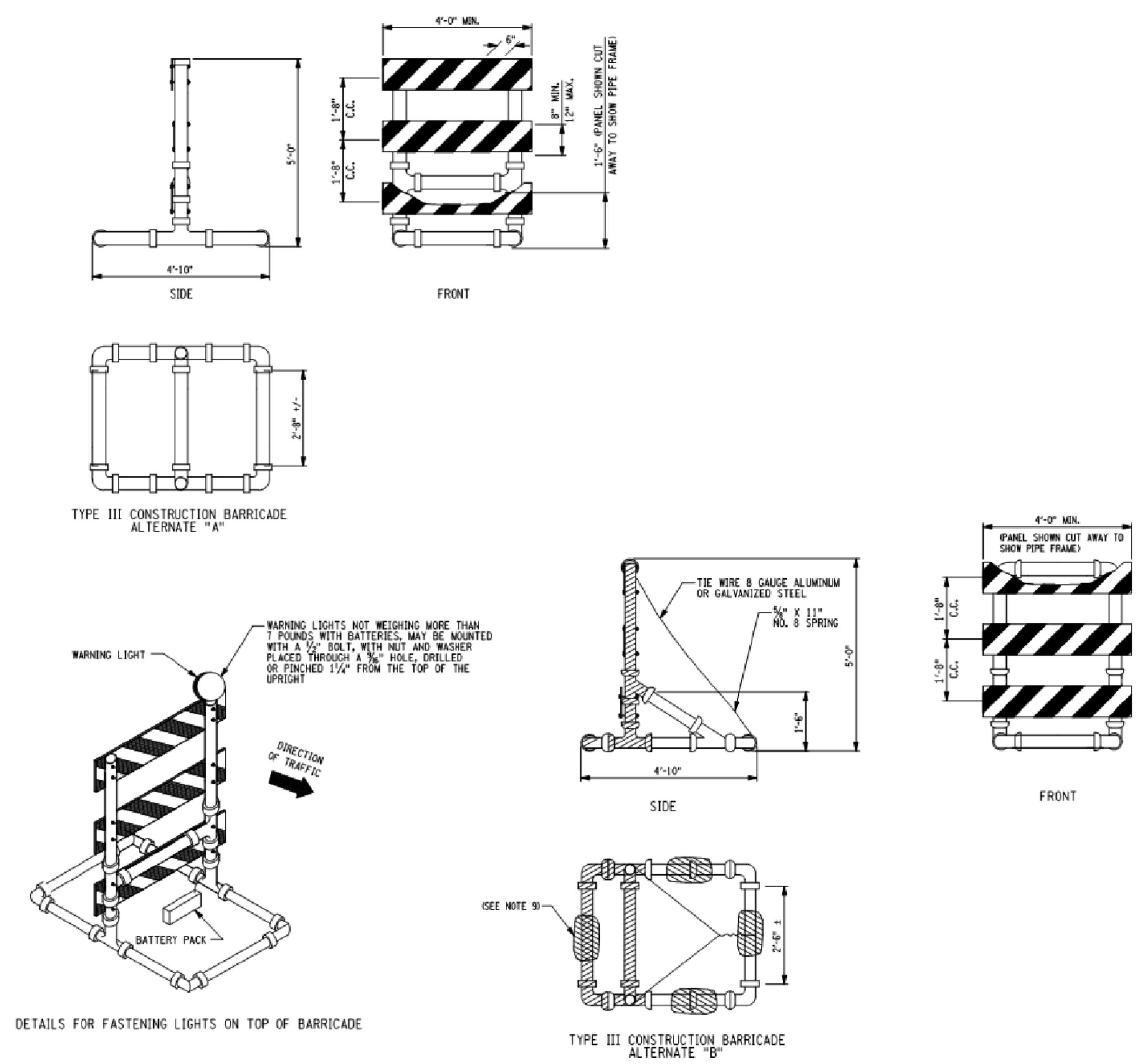


NOTES:

1. THE DETAILS AND MATERIALS FOR TYPE III CONSTRUCTION BARRICADES ARE NCHRP 350 APPROVED. IF THE CONTRACTOR ELECTS TO USE AN ALTERNATE DESIGN OR MATERIALS, THE ALTERNATIVE SHALL BE NCHRP 350 APPROVED.
2. THE ALTERNATES SHOWN ON THIS SHEET ARE EQUALLY ACCEPTABLE AND THE CONTRACTOR MAY USE ANY ONE OR A MIXTURE OF TYPES.
3. PANELS SHALL HAVE 6" WIDE REFLECTORIZED ORANGE AND WHITE DIAGONAL STRIPES OF TYPE I OR TYPE III SHEETING SLOPING AT AN ANGLE OF 45°, IN ACCORDANCE WITH §729-08. THE STRIPES SHALL SLOPE DOWNWARD TOWARD THE SIDE ON WHICH TRAFFIC IS TO PASS.
4. BALLAST MAY BE PLACED ON THE BASE MEMBERS OF THE BARRICADE. BALLAST SHALL NOT EXTEND INTO THE ACCESSIBLE PASSAGE WIDTH OF 5' WHERE BARRICADES ARE USED TO CHANNELIZE PEDESTRIANS.
5. PANELS FOR BARRICADES MAY BE WOOD, PLASTIC, OR ALUMINUM. PIPE FOR BARRICADES SHALL USE SDR SIZES 21 TO 32.5.
6. WHEN THE BATTERY AND LIGHT WEIGH MORE THAN 7 LBS, THE BATTERY SHALL BE MOUNTED ON THE BOTTOM OF THE BARRICADE.
7. ALL PIPES SHALL BE WHITE. WHITE FITTINGS ARE PREFERRED, BLACK MAY BE USED. ALL JOINTS IN ALTERNATE "A" SHALL BE GLUED WITH A SOLVENT CEMENT COMPATIBLE WITH THE P.V.C. PIPE.
8. ALL JOINTS IN ALTERNATE "B" SHALL BE FREE TO SEPARATE UPON VEHICLE IMPACT. SHADED PIPES AND FITTINGS SHALL BE TIED TOGETHER WITH A MINIMUM 3/8" DIA. NYLON, OR EQUIVALENT ROPE THREADED INTO THE PIPE AND FITTING INTERIOR.
9. IF BARRICADES ARE USED TO TEMPORARILY CHANNELIZE PEDESTRIANS, THERE SHALL BE A CONTINUOUS DETECTABLE BOTTOM AND TOP RAILS WITH NO GAP BETWEEN INDIVIDUAL BARRICADES TO BE DETECTABLE TO BLIND OR VISUALLY IMPAIRED USERS OF LONG CANES. THE BOTTOM OF THE BOTTOM RAIL SHALL BE NO HIGHER THAN 6" ABOVE THE GROUND AND THE TOP OF THE TOP RAIL SHALL BE NO LOWER THAN 3' ABOVE THE GROUND.

STATE OF NEW YORK
DEPARTMENT OF TRANSPORTATION

U.S. CUSTOMARY STANDARD SHEET

TYPE III CONSTRUCTION BARRICADES
(SHEET 1 OF 2)

APPROVED OCTOBER 06, 2008 | ISSUED UNDER EB 08-036
/S/ J. F. TYNAN, P.E.
DEPUTY CHIEF ENGINEER (CONSTRUCTION)
619-02

EFFECTIVE DATE: 01/08/09

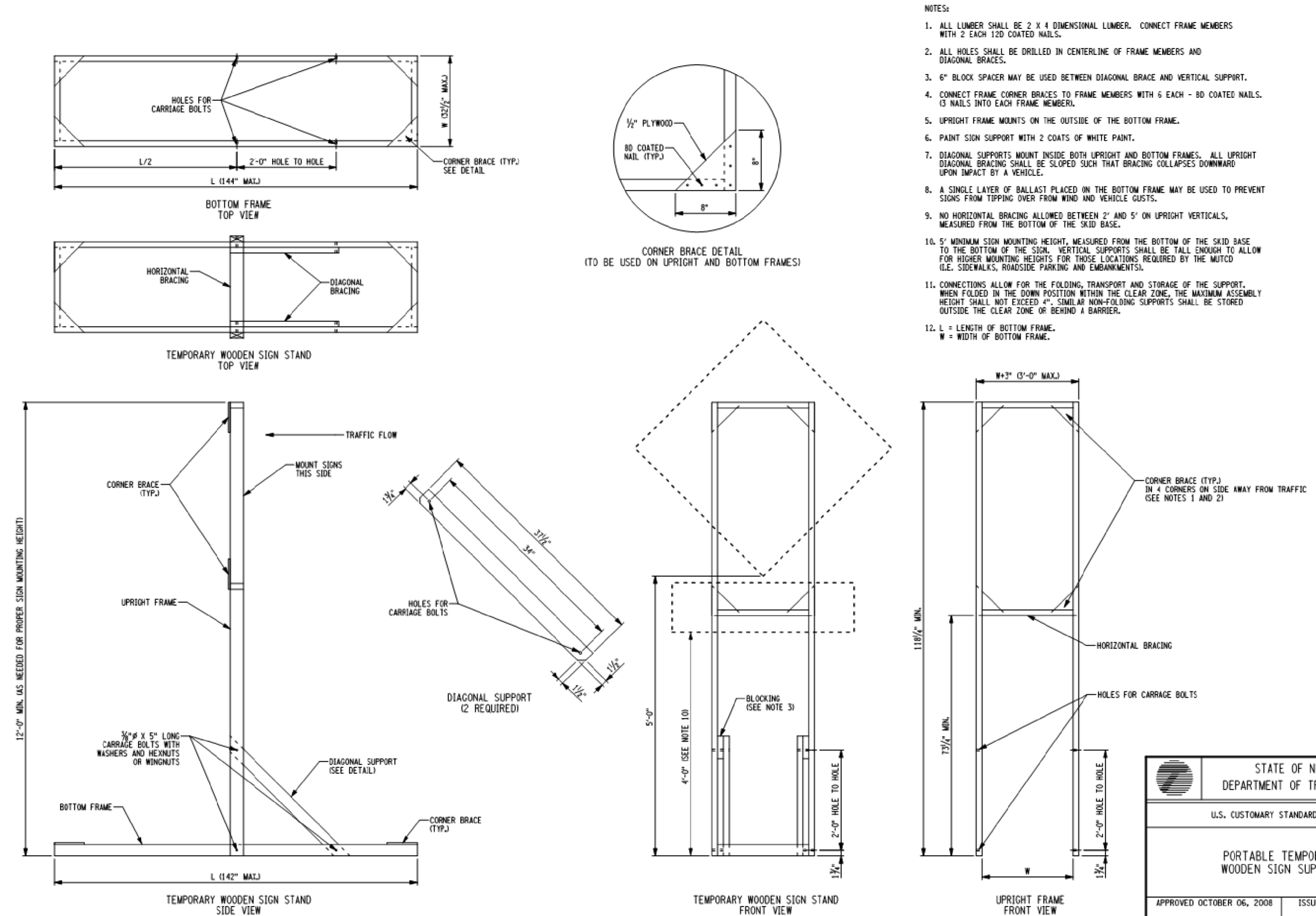


NOTES:

1. ALL LUMBER SHALL BE 2 X 4 DIMENSIONAL LUMBER. CONNECT FRAME MEMBERS WITH 2 EACH 12D COATED NAILS.
2. ALL HOLES SHALL BE DRILLED IN CENTERLINE OF FRAME MEMBERS AND DIAGONAL BRACES.
3. 6" BLOCK SPACER MAY BE USED BETWEEN DIAGONAL BRACE AND VERTICAL SUPPORT.
4. CONNECT FRAME CORNER BRACES TO FRAME MEMBERS WITH 6 EACH - 8D COATED NAILS. (3 NAILS INTO EACH FRAME MEMBER).
5. UPRIGHT FRAME MOUNTS ON THE OUTSIDE OF THE BOTTOM FRAME.
6. PAINT SIGN SUPPORT WITH 2 COATS OF WHITE PAINT.
7. DIAGONAL SUPPORTS MOUNT INSIDE BOTH UPRIGHT AND BOTTOM FRAMES. ALL UPRIGHT DIAGONAL BRACING SHALL BE SLOPED SUCH THAT BRACING COLLAPSES DOWNWARD UPON IMPACT BY A VEHICLE.
8. A SINGLE LAYER OF BALLAST PLACED ON THE BOTTOM FRAME MAY BE USED TO PREVENT SIGNS FROM TIPPING OVER FROM WIND AND VEHICLE GUSTS.
9. NO HORIZONTAL BRACING ALLOWED BETWEEN 2' AND 5' ON UPRIGHT VERTICALS, MEASURED FROM THE BOTTOM OF THE SKID BASE.
10. 5' MINIMUM SIGN MOUNTING HEIGHT, MEASURED FROM THE BOTTOM OF THE SKID BASE TO THE BOTTOM OF THE SIGN. VERTICAL SUPPORTS SHALL BE TALL ENOUGH TO ALLOW FOR HIGHER MOUNTING HEIGHTS FOR THOSE LOCATIONS REQUIRED BY THE MUTCD (I.E. SIDEWALKS, ROADSIDE PARKING AND EMBANKMENTS).
11. CONNECTIONS ALLOW FOR THE FOLDING, TRANSPORT AND STORAGE OF THE SUPPORT. WHEN FOLDED IN THE DOWN POSITION WITHIN THE CLEAR ZONE, THE MAXIMUM ASSEMBLY HEIGHT SHALL NOT EXCEED 4". SIMILAR NON-FOLDING SUPPORTS SHALL BE STORED OUTSIDE THE CLEAR ZONE OR BEHIND A BARRIER.
12. L = LENGTH OF BOTTOM FRAME.
W = WIDTH OF BOTTOM FRAME.

STATE OF NEW YORK
DEPARTMENT OF TRANSPORTATION

U.S. CUSTOMARY STANDARD SHEET

PORTABLE TEMPORARY
WOODEN SIGN SUPPORT

APPROVED OCTOBER 06, 2008 | ISSUED UNDER EB 08-036
/S/ J. F. TYNAN, P.E.
DEPUTY CHIEF ENGINEER (CONSTRUCTION)
619-04

EFFECTIVE DATE: 01/08/09

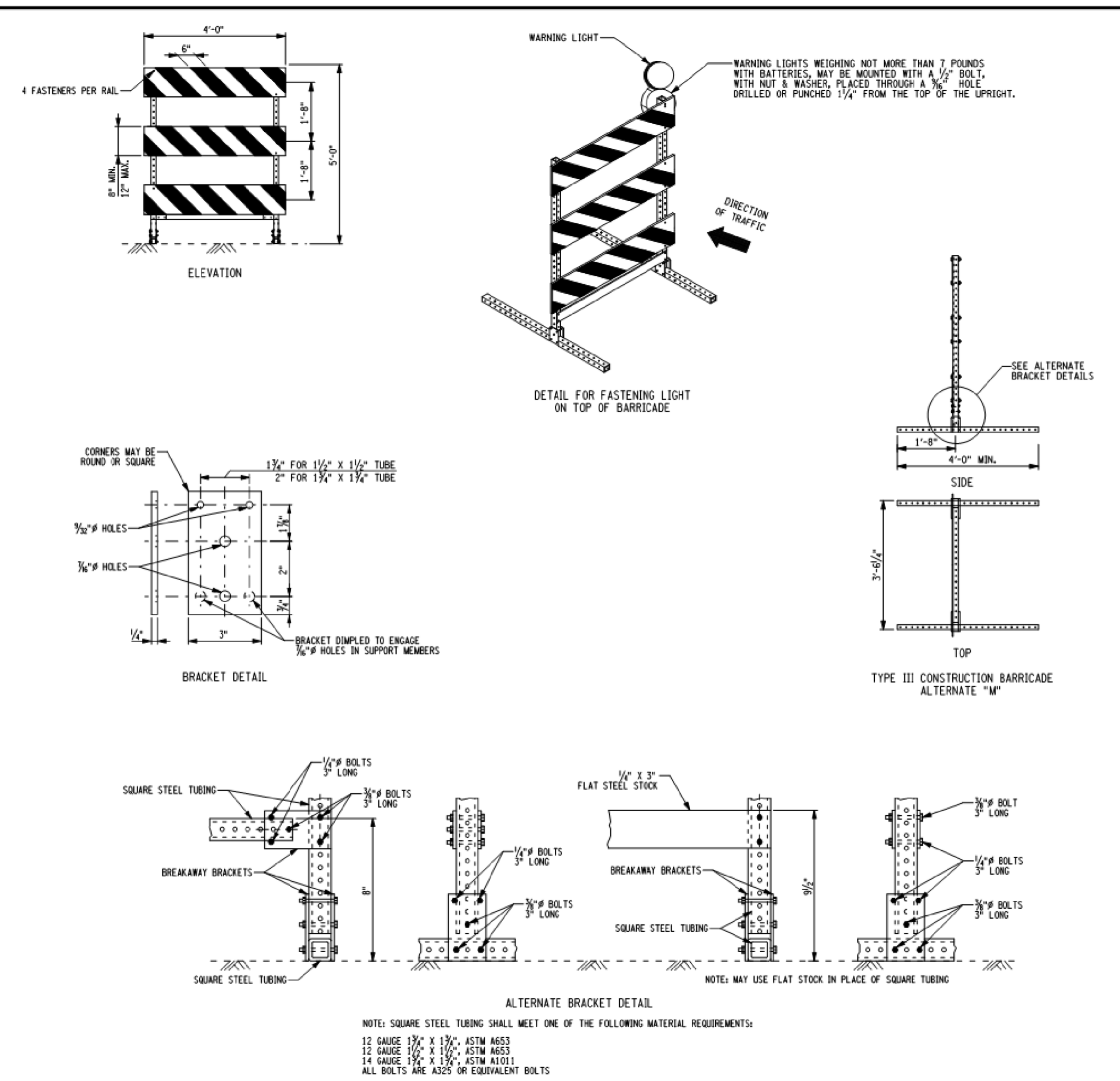


NOTES:

1. THE DETAILS AND MATERIALS FOR TYPE III CONSTRUCTION BARRICADES ARE NCHRP 350 APPROVED. IF THE CONTRACTOR ELECTS TO USE AN ALTERNATE DESIGN OR MATERIALS, THE ALTERNATIVE SHALL BE NCHRP 350 APPROVED.
2. THE ALTERNATES SHOWN ON THIS SHEET ARE EQUALLY ACCEPTABLE AND THE CONTRACTOR MAY USE ANY ONE OR A MIXTURE OF TYPES.
3. PANELS SHALL HAVE 6" WIDE REFLECTORIZED ORANGE AND WHITE DIAGONAL STRIPES OF TYPE I OR TYPE III SHEETING SLOPING AT AN ANGLE OF 45°, IN ACCORDANCE WITH §729-08. THE STRIPES SHALL SLOPE DOWNWARD TOWARD THE SIDE ON WHICH TRAFFIC IS TO PASS.
4. BALLAST MAY BE PLACED ON THE BASE MEMBERS OF THE BARRICADE. BALLAST SHALL NOT EXTEND INTO THE ACCESSIBLE PASSAGE WIDTH OF 5' WHERE BARRICADES ARE USED TO CHANNELIZE PEDESTRIANS.
5. PANELS FOR BARRICADES MAY BE WOOD, PLASTIC, OR ALUMINUM.
6. WHEN THE BATTERY AND LIGHT WEIGH MORE THAN 7 LBS, THE BATTERY SHALL BE MOUNTED AT THE BOTTOM OF THE BARRICADE.
7. ALTERNATE "M" BARRICADES SHALL BE EXTENDED WITH INTERNAL SPLICE MEMBERS. THE INTERNAL SPLICE MEMBERS SHALL BE ONE 1 FOOT LENGTHS OF SQUARE STEEL TUBING INSERTED 6" INTO EACH UPRIGHT. THE EXTENSION SHALL THEN BE PLACED OVER THE TOP OF THE INTERNAL SPLICE MEMBER. THE EXTENSION AND INTERNAL SPLICE MEMBER SHALL BE HELD IN PLACE WITH 3/8" BOLTS WITH NUTS AND WASHERS PLACED 4"(±1") ABOVE AND BELOW THE JOINT FORMED BY THE EXTENSION. THE INTERNAL SPLICE MEMBERS SHALL BE ONE OF THE FOLLOWING SIZES DEPENDING UPON THE TUBING USED TO FABRICATE THE BARRICADE. GAUGES FOR SQUARE TUBES SHALL BE UNITED STATES STANDARD GAUGE.

| BARRICADE MEMBERS | INTERNAL SPLICE MEMBERS |
|---|---|
| 12 GAUGE 1¾" X 1¾" | 12 GAUGE 1½" X 1½" |
| 14 GAUGE 1¾" X 1¾" | 14 GAUGE 1½" X 1½" |
| 12 GAUGE 1½" X 1½" | 12 GAUGE 1¼" X 1¼" |

8. IF BARRICADES ARE USE TO TEMPORALLY CHANNELIZE PEDESTRIANS, THERE SHALL BE CONTINUOUS DETECTABLE BOTTOM AND TOP RAILS WITH NO GAP BETWEEN INDIVIDUAL BARRICADES, TO BE DETECTABLE TO BLIND OR VISUALLY IMPAIRED USERS OF LONG CANES. THE BOTTOM OF THE BOTTOM RAIL SHALL BE NO LOWER THAN 6" ABOVE THE GROUND SURFACE. THE TOP OF THE TOP RAIL SHALL BE NO LOWER THAN 3' ABOVE THE GROUND SURFACE.

STATE OF NEW YORK
DEPARTMENT OF TRANSPORTATION

U.S. CUSTOMARY STANDARD SHEET

TYPE III CONSTRUCTION BARRICADES
(SHEET 2 OF 2)

APPROVED OCTOBER 06, 2008 | ISSUED UNDER EB 08-036
/S/ J. F. TYNAN, P.E.
DEPUTY CHIEF ENGINEER (CONSTRUCTION)
619-02

EFFECTIVE DATE: 01/08/09


INFOCUS
ENGINEERING SERVICES
86-16 QUEENS BLVD SUITE Suite#205
ELMHURST, NEW YORK 11373
TEL.#: 718-233-2968
EMAIL: info@infocuspc.com www.infocuspc.com


NOTE:
INFOCUS WAS NOT RETAINED FOR ANY SUPERVISION OF THE ACTUAL CONSTRUCTION.

FOR OFFICE USE

| DATE | DESCRIPTION |
|---|---|
| 02/24/22 | RESUBMISSION |

DOB JOB #'s:

Project location:
242 SPRUCE STREET
ALBANY, NY 12210

Project owner and address:
PROPOSED MULTI DWELLINGS RESIDENCE

Project name/description:

Drawing name:
DETAIL-1

COPYRIGHT 2021 BY: INFOCUS

seal and signature:
STATE OF NEW YORK · WU CHEN · 084996 · LICENSED PROFESSIONAL ENGINEER

| | |
|---|---|
| Date | 12-22-2021 |
| Project no: | 2012-03 |
| drawn by: | M.D. |
| chk by: | W.C. |
| Dwg. no: | S-106.00 |
| CAD FILE #: | PAGE #: 7 of 8 |

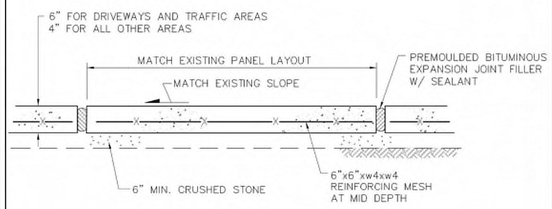


NOTES:

1. THE CONCRETE USED SHALL BE PORTLAND CEMENT, AIR-ENTRAINED, CLASS "A" CONCRETE WITH AN AIR CONTENT OF 5%, MIN., TO 7%, MAX., AND A SLUMP OF THREE INCHES, MIN., TO FIVE INCHES, MAX.
2. ALL CONCRETE SIDEWALK REPLACEMENT SHALL BE TO FULL PANEL LIMITS, PARTIAL PANEL REPLACEMENT SHALL NOT BE ALLOWED.
3. ALL SIDEWALKS SHALL BE FINISHED WITH A MAGNESIUM FLOAT FINISH UNLESS DIRECTED OTHERWISE BY THE CITY.
4. ALL CURBING SHALL BE RESET OR REPLACED AS REQUIRED, IN ACCORDANCE WITH THE CITY DETAILS.
5. EXPANSION JOINTS TO BE PLACED BETWEEN ADJACENT SLABS, AT BUILDING LINE, AT CURBS, OR AT PENETRATING STRUCTURES.

NO SCALE

CITY OF ALBANY DIVISION OF ENGINEERING
STANDARD DETAILS

Gerald D. Jennings, Mayor
Randall J. Milano, P.E., City Engineer

DETAIL NAME: SIDEWALK REPLACEMENT DETAIL

| DETAIL No. | FILE NAME: | DATE ISSUED | REVISION DATE |
|---|---|---|---|
| SW-2 | SW-2.DWG | 05/01/02 | 06/01/10 |

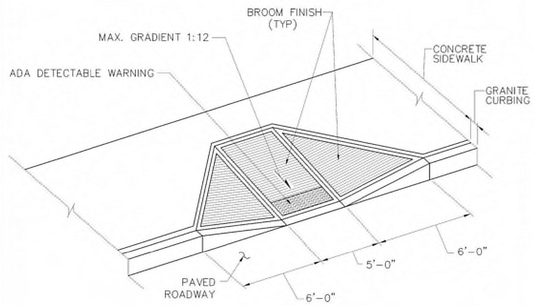


NOTES:

1. CURB SHALL BE FLUSH WITH PAVEMENT AT ROADWAY.
2. SEE STANDARD DETAILS FOR CURB AND SIDEWALK INSTALLATION.
3. SEE STANDARD DETAILS FOR ADA DETECTABLE WARNING STRIP INSTALLATION.
4. INSTALLATION SHALL MEET ALL APPLICABLE ADA CODES AND STANDARDS.

NO SCALE

CITY OF ALBANY DIVISION OF ENGINEERING
STANDARD DETAILS

Gerald D. Jennings, Mayor
Randall J. Milano, P.E., City Engineer

DETAIL NAME: SIDEWALK RAMP AT STREET DETAIL

| DETAIL No. | FILE NAME: | DATE ISSUED | REVISION DATE |
|---|---|---|---|
| SW-3 | SW-3.DWG | 05/01/02 | 06/01/10 |

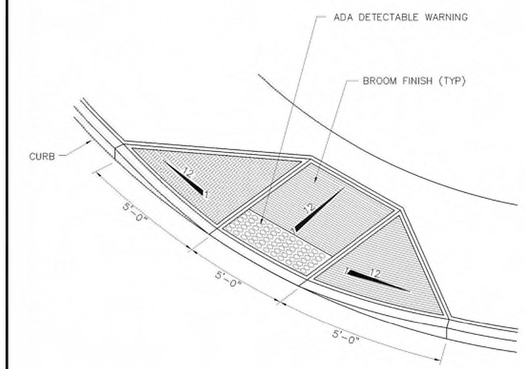


NOTE:

1. CURB SHALL BE FLUSH WITH PAVEMENT AT ROADWAY.
2. SEE STANDARD DETAILS FOR CURB AND SIDEWALK INSTALLATION.
3. SEE STANDARD DETAIL FOR ADA DETECTABLE WARNING STRIP INSTALLATION.
4. INSTALLATION SHALL MEET ALL APPLICABLE ADA CODES AND STANDARDS.

NO SCALE

CITY OF ALBANY DIVISION OF ENGINEERING
STANDARD DETAILS

Gerald D. Jennings, Mayor
Randall J. Milano, P.E., City Engineer

DETAIL NAME: SIDEWALK RAMP AT STREET CORNER DETAIL

| DETAIL No. | FILE NAME: | DATE ISSUED | REVISION DATE |
|---|---|---|---|
| SW-4 | SW-4.DWG | 05/01/02 | 06/01/10 |

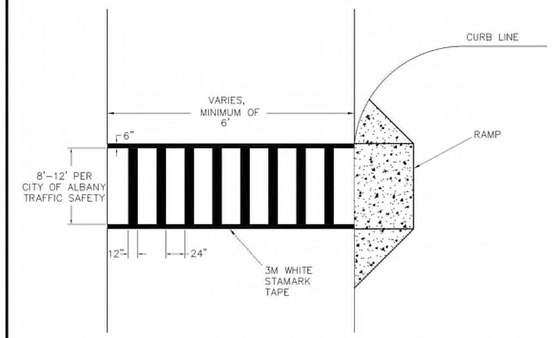


NOTE:

1. ALL TAPE TO BE WHITE 3M STAMARK TAPE.
2. EXAMPLE A OR EXAMPLE D OF THE NYSMUTCD MANUAL, SECTION 263.23 SHALL BE USED PER CITY OF ALBANY TRAFFIC SAFETY RECOMMENDATIONS.

NO SCALE

CITY OF ALBANY DIVISION OF ENGINEERING
STANDARD DETAILS

Gerald D. Jennings, Mayor
Randall J. Milano, P.E., City Engineer

DETAIL NAME: CROSSWALK DETAIL

| DETAIL No. | FILE NAME: | DATE ISSUED | REVISION DATE |
|---|---|---|---|
| CW-1 | CW-1.DWG | 12/9/03 | 06/01/10 |

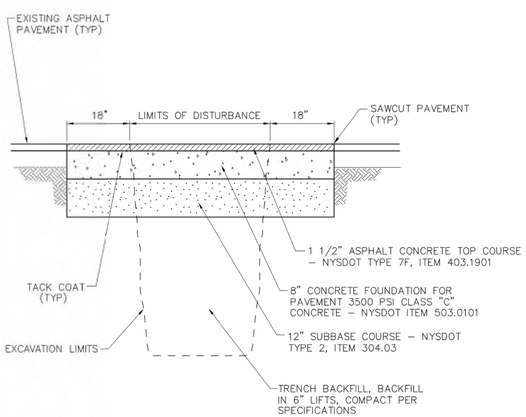


NOTE:

1. IF LIMITS OF TRENCHING EXCEEDS 50 FEET, CONTRACTOR SHALL COMPLETE CURB TO CURB MILLING PER CITY DETAILS.
2. ALL PAVEMENT MARKINGS DISTURBED SHALL BE RESTORED TO THE SATISFACTION OF THE CITY.
3. ALL JOINTS TO BE SEALED WITH ASPHALT EMULSION (AC-20) NYSDOT ITEM 702-0500.

NO SCALE

CITY OF ALBANY DIVISION OF ENGINEERING
STANDARD DETAILS

Gerald D. Jennings, Mayor
Randall J. Milano, P.E., City Engineer

DETAIL NAME: STREET RESTORATION ASPHALT PAVEMENT DETAIL

| DETAIL No. | FILE NAME: | DATE ISSUED | REVISION DATE |
|---|---|---|---|
| SR-1 | SR-1.DWG | 05/01/02 | 10/10/12 |

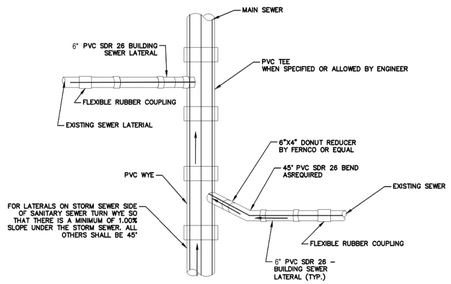


PLAN VIEW

GENERAL NOTES:

EXCAVATION, TRENCHING, SHEETING AND SHORING REQUIREMENTS:

1. THE CONTRACTOR SHALL BE RESPONSIBLE FOR THE ADEQUACY OF ALL SHEETING AND SHORING USED AND FOR ALL DAMAGE RESULTING FROM ITS FAILURE OR FROM PLACING, MAINTAINING AND REMOVING IT.
2. REQUIREMENT OF REGULATORY AGENCIES:
   - 2.1. SUBPART 23-4, "EXCAVATION OPERATIONS.", OF THE NEW YORK STATE DEPARTMENT OF LABOR INDUSTRIAL CODE 23.
   - 2.2. SUBPART P, "EXCAVATIONS" OF UNITED STATES DEPARTMENT OF LABOR O.S.H.A REGULATIONS FOR CONSTRUCTION.
   - 2.3. THE MORE STRINGENT REQUIREMENT IN EACH OF THE ABOVE CODES SHALL APPLY. THESE REQUIREMENTS ARE MINIMUM REQUIREMENTS AND SHALL BE INCREASED IF NECESSARY TO PROVIDE SAFE WORKING
   - 2.4. ALL MUNICIPAL COUNTY, STATE, OR FEDERAL ORDINANCES, REGULATIONS, OR LAWS AND ALL NECESSARY PERMITS AND APPROVALS OBTAINED BY THE CONTRACTOR SHALL BE OVERFED CONDITIONS.

**SANITARY SEWER SERVICE CONNECTIONS**


INFOCUS ENGINEERING SERVICES
86-16 QUEENS BLVD SUITE Suite#205
ELMHURST, NEW YORK 11373
TEL.#: 718-233-2968
EMAIL: info@infocuspc.com www.infocuspc.com


NOTE:
INFOCUS WAS NOT RETAINED FOR ANY SUPERVISION OF THE ACTUAL CONSTRUCTION.

FOR OFFICE USE

| DATE | DESCRIPTION |
|---|---|
| 02/24/22 | RESUBMISSION |

DOB JOB #'s:

Project location:
242 SPRUCE STREET
ALBANY, NY 12210

Project owner and address:
PROPOSED MULTI DWELLINGS RESIDENCE

Project name/description:

Drawing name:
SITE PLAN

seal and signature:

| | |
|---|---|
| Date | 12-22-2021 |
| Project no: | 2012-03 |
| drawn by: | M.D. |
| chk by: | W.C. |
| Dwg. no: | S-107.00 |
| CAD FILE #: | PAGE #: 8 of 8 |

COPYRIGHT 2021 BY: INFOCUS

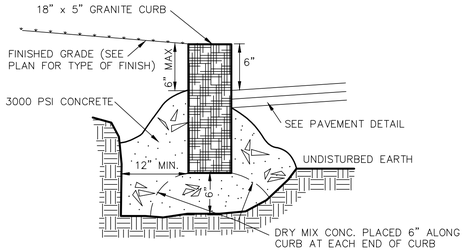


1/C7 NEW GRANITE CURB DETAIL

NOT TO SCALE

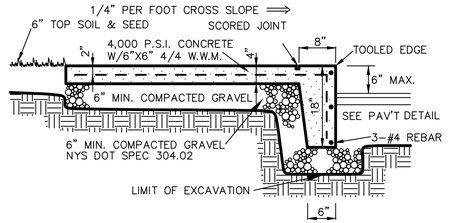


5/C7 INTEGRAL WALK & CURB DETAIL AT WAF

NOT TO SCALE

WQv, 1 /
WITHIN TI

## NOTES

1. 48 HOURS NOTICE MUST BE GIVEN TO DEPARTMENT OF WATER FOR INSPECTIONS FOR THE SANITARY, WATER AND STORMWATER UTILITIES.

2. PRESSURE AND LEAKAGE TESTING OF THE WATER MAIN SHALL BE WITNESSED BY DEPARTMENT STAFF AND ACCEPTABLE BACTERIOLOGICAL TEST MUST BE SUBMITTED AND ACCEPTED BY THE DEPARTMENT PRIOR TO FINAL OF THE NEW WATER MAIN.

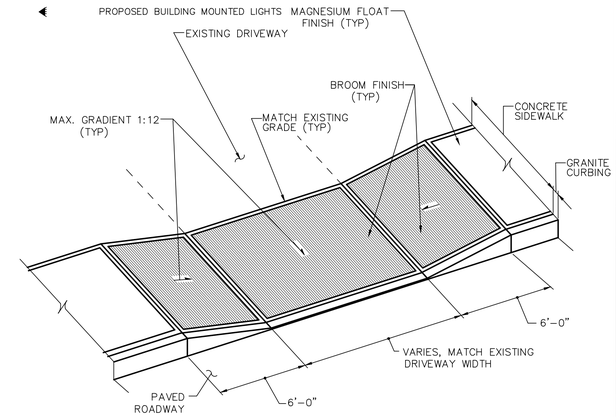


NOTES:
1. CURB REVEALS SHALL BE 1/2" MAX WHERE RAMP MEETS PAVEMENT AT ROADWAY.
2. SIDEWALK SHALL BE INSTALLED FLUSH WITH EXISTING DRIVEWAY.
3. SEE STANDARD SIDEWALK DETAIL FOR SIDEWALK INSTALLATION.

1/C3 SIDEWALK AND DRIVEWAY APRON DETAIL

NOT TO SCALE

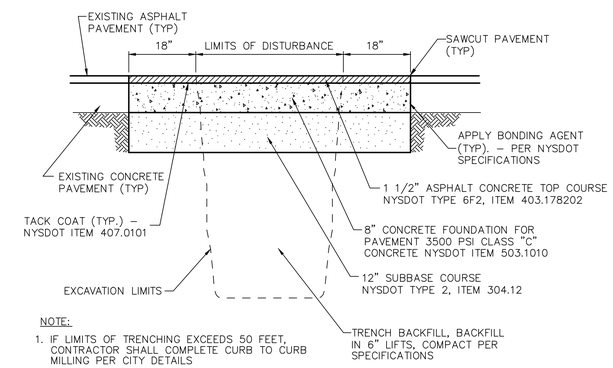


NOTE:
1. IF LIMITS OF TRENCHING EXCEEDS 50 FEET, CONTRACTOR SHALL COMPLETE CURB TO CURB MILLING PER CITY DETAILS
2. ALL PAVEMENT MARKINGS DISTURBED SHALL BE RESTORED TO THE SATISFACTION OF THE CITY
3. ALL JOINTS TO BE SEALED WITH ASPHALT EMULSION (AC-20) NYSDOT ITEM 702-0500

3/ STREET RESTORATION CONCRETE PAVEMENT DETAIL

NOT TO SCALE

## CONSTRUCTION SEQUENCING & SEDIMENTATION AND EROSION CONTROL DURING CONSTRUCTION

CONSTRUCTION SEQUENCING & SEDIMENTATION AND EROSION CONTROL DURING CONSTRUCTION
The construction sequence for this project is shown below. Approximate timing is indicated where applicable in red following steps.
Prior to commencement of any work this SWPPP
1.Assure that copy of SWMR & SWPPP is on the site. **ON COMMENCEMENT**
2.Establish Qualified Individual who will be performing site inspection. **ON COMMENCEMENT**
3.Inspections must be performed by the qualified professional must be submitted to the MS4 Coordinator. **FROM COMMENCEMENT UNTIL PROJECT COMPLETE**
4.Establish Trained Contractor who will be on site. At least one Trained Contractor must be on site whenever ground disturbing activities are being undertaken. **ON COMMENCEMENT**
5. Establish contact person for Contractor/Subcontractor. **ON COMMENCEMENT**
6. **IN CASE OF ANY SPILLS OF MATERIALS ON SITE, EXECUTE SPILL RESPONSE PLAN CONTAINED IN APPENDIX #9**
Construction Sequence
1. Install traffic controls as required. **PRIOR TO THE START OF ANY CONSTRUCTION**
2. Install construction fencing as required. **PRIOR TO THE START OF ANY CONSTRUCTION**
3. Commence work on site.
4. Undertake any utility relocations or abandonment required. **PRIOR TO DEMOLITION**
5. Install sedimentation fence or other controls as indicated on the plan. **PRIOR TO COMMENCEMENT OF ANY GRADING -FENCE TO REMAIN IN PLACE UNTIL ALL AREAS ARE STABILIZED.**
6. Grade and prepare construction entrance. **PRIOR TO COMMENCEMENT OF ANY GRADING -CONSTRUCTION ENTRANCE TO REMAIN IN PLACE UNTIL ALL AREAS ARE STABILIZED.**
7. Demolish building and asphalt pavement. **UPON COMPLETION OF DEMOLITION REMOVE ITEMS TO BE SALVAGED FROM SITE OR STOCKPILE ON SITE FOR REUSE.**
8.Commence installation of the temporary sediment trap and discharge pipe. **THIS SHOULD BE IN PLACE AFTER DEMOLITION AN MAY BE RELOCATED AS CONSTRUCTION TAKES PLACE>**
9. Establish fueling area. Relocate when required. **MAINTAIN A FUELING AREA FOR EQUIPMENT UNTIL NO LONGER REQUIRED.**
10.The existing pavement must be kept swept clean to avoid tracking materials onto any streets. **CONTINUOUSLY FROM INCEPTION TO COMPLETION OF STABILIZATION OR UNTIL PROJECT IS COMPLETE.**
11. Maintain this area clean of debris and verify condition and safety of storage of materials listed below. Requires daily inspection. **CONTINUOUSLY FROM INCEPTION UNTIL PROJECT IS COMPLETE.**
12. Any construction materials, chemicals or construction debris must be stored in sealed receptacles, trailers or buildings. Any storage piles of materials meant for installation (i.e., sand, etc.) must be surrounded by sedimentation fence. The list of anticipated materials stored on site during construction is provided below and must be updated if any additional materials are utilized: **CONTINUOUSLY FROM INCEPTION UNTIL PROJECT IS COMPLETE.**
- Select Fill
- Fencing Materials
- Pipes
- Pipe Solvents
- Concrete Structures
- Reinforcing Steel
- Decorative Stone
- Brick
- Concrete Additives
- Concrete Sealers

13.MSDS sheets must be available on site for all materials used or imported to the site. **CONTINUOUSLY FROM INCEPTION UNTIL PROJECT IS COMPLETE.**
14. Any chemical spills must be contained immediately on site and reported to NYSDEC. **CONTINUOUSLY FROM INCEPTION TO FILING OF NOTICE UNTIL PROJECT IS COMPLETE.**
15. Oil and grease spills from equipment shall be treated immediately. **CONTINUOUSLY FROM INCEPTION UNTIL PROJECT IS COMPLETE.**
16. Clean sediment trap as required. **CONTINUOUSLY FROM INSTALLATION UNTIL PROJECT IS COMPLETE..**
17. Direct drainage to porous pavement and treatment system. **PRIOR TO REMOVAL OF TEMPORARY SEDIMENT TRAP.**
18. Abandon sediment trap. **AFTER PERMANENT STORAGE AND POROUS PAVEMENT GOES ON LINE.**
19. Complete construction of Project.
20. Obtain approval of Project completion from the Department of Water & Water Supply,

## EROSION AND SEDIMENT CONTROL NOTES

1. THIS PROJECT IS AUTHORIZED UNDER NYSDEC SPDES GENERAL PERMIT GP-0-15-002.

2. ANY CONTRACTOR INVOLVED IN EARTHWORK ACTIVITIES, INCLUDING BUT NOT LIMITED TO: CLEARING, GRADING AND TRENCHING, SHALL REVIEW ALL PERMIT CONDITIONS AND CERTIFY UNDERSTANDING OF THESE CONDITIONS, IN WRITING. IT IS THE CONTRACTOR'S RESPONSIBILITY TO IMPLEMENT ALL EROSION CONTROLS DESCRIBED IN GP-0-15-002, AND IT IS NOT THE INTENT OF THESE DRAWINGS TO REPLACE OR DISSEMINATE THE PERMIT REQUIREMENTS. THE CONTRACTOR SHALL REMAIN IN COMPLIANCE WITH THE PERMIT AT ALL TIMES.

3. AT ALL TIMES SOIL DISTURBING ACTIVITIES SHALL REMAIN LESS THAN 1 ACRE. THE CONTRACTOR SHALL COORDINATE EARTHWORK ACTIVITIES AND IMPLEMENTATION OF SOIL STABILIZATION MEASURES TO ENSURE COMPLIANCE TO THIS PERMIT REQUIREMENT. THE SITE WILL BE MONITORED AT ALL TIMES TO ENSURE SOIL DISTURBANCE DOES NOT EXCEED 1 ACRE. IF THE SOIL DISTURBANCE EXCEEDS ONE ACRE AT ANY TIME, A STOP WORK ORDER WILL ISSUED UNTIL THE SITE RECEIVES COVERAGE UNDER SPDES GENERAL PERMIT FOR CONSTRUCTION ACTIVITY.

4. THE CONTRACTOR SHALL MAINTAIN A CLEAN CONSTRUCTION AND EQUIPMENT ENTRANCE WHENEVER PRACTICABLE.

5. DISTURBED AREAS SHALL BE STABILIZED WITHIN 14 DAYS OF COMPLETION OR SUSPENSION OF GRADING OPERATIONS.

6. INSTALL TEMPORARY & PERMANENT SEEDING IN ACCORDANCE WITH THE NEW YORK GUIDELINES FOR URBAN EROSION AND SEDIMENT CONTROL STANDARD AND SPECIFICATION FOR TEMPORARY CONSTRUCTION AREA SEEDING AND FOR MULCHING:

STANDARD AND SPECIFICATIONS FOR TEMPORARY CONSTRUCTION AREA PLANTINGS, PAGE 4.58:
WATER MANAGEMENT PRACTICES MUST BE INSTALLED AS APPROPRIATE FOR SITE CONDITIONS. THE AREA MUST BE ROUGH GRADED AND SLOPES PHYSICALLY STABLE. LARGE DEBRIS AND ROCKS ARE USUALLY REMOVED. SEEDBED MUST BE SEEDED WITHIN 24 HOURS OF DISTURBANCE OR SCARIFICATION OF THE SOIL SURFACE WILL BE NECESSARY PRIOR TO SEEDING.

FERTILIZER OR LIME ARE NOT TYPICALLY USED FOR TEMPORARY SEEDINGS.

IF: SPRING OR SUMMER OR EARLY FALL, THEN SEED THE AREA WITH RYEGRASS (ANNUAL OR PERENNIAL) AT 30 LBS. PER ACRE. (APPROXIMATELY 0.7 LB./1000 SQ. FT. OR USE 1 LB./1000 SQ. FT.)

IF: LATE FALL OR EARLY WINTER, THEN SEED CERTIFIED 'AROOSTOOK' WINTER RYE (CEREAL RYE) AT 1000 LBS. PER ACRE (2.5 LBS./1000 SQ. FT.).

ANY SEEDING METHOD MAY BE USED THAT WILL PROVIDE UNIFORM APPLICATION OF SEED TO THE AREA AND RESULT IN RELATIVELY GOOD SOIL TO SEED CONTACT.

MULCH THE AREA WITH HAY OR STRAW AT 2 TONS/ACRE (APPROX. 90 LBS./1000 SQ. FT. OR 2 BALES). QUALITY OF HAY OR STRAW MULCH ALLOWABLE WILL BE DETERMINED BASED ON LONG TERM USE AND VISUAL CONCERNS. MULCH ANCHORING WILL BE REQUIRED WHERE WIND OR AREAS OF CONCENTRATED WATER ARE OF CONCERN. WOOD FIBER HYDROMULCH OR OTHER SPRAYABLE PRODUCTS APPROVED FOR EROSION CONTROL (NYLON WEB OR MESH) MAY BE USED IF APPLIED ACCORDING TO MANUFACTURERS' SPECIFICATIONS. CAUTION IS ADVISED WHEN USING NYLON OR OTHER SYNTHETIC PRODUCTS. THEY MAY BE DIFFICULT TO REMOVE PRIOR TO FINAL SEEDING AND CAN BE A HAZARD TO YOUNG WILDLIFE SPECIES.

| ANCHORING METHOD OR MATERIAL | KIND OF MULCH TO BE ANCHORED | HOW TO APPLY |
|---|---|---|
| PEG AND TWINE | HAY OR STRAW | AFTER MULCHING, DIVIDE AREAS INTO BLOCKS APPROXIMATELY 1 SQ. YD. IN SIZE. DRIVE 4-6 PEGS PER BLOCK TO WITHIN 2" TO 3" OF SOIL SURFACE. SECURE MULCH TO SURFACE BY STRETCHING TWINE BETWEEN PEGS IN CRISS-CROSS PATTERN ON SECURE TWINE AROUND EACH PEG WITH 2 OR MORE TIGHT TURNS. DRIVE PEGS FLUSH WITH SOIL. DRIVING STAKES INTO GROUND TIGHTENS THE TWINE. |
| MULCH NETTING | HAY OR STRAW | STAPLE THE LIGHT-WEIGHT PAPER, JUTE, WOOD FIBER, OR PLASTIC NETTINGS TO SOIL SURFACE ACCORDING TO MANUFACTURER'S RECOMMENDATIONS. SHOULD BE BIODEGRADABLE. MOST PRODUCTS ARE NOT SUITABLE FOR FOOT TRAFFIC. |
| WOOD CELLULOSE FIBER | HAY OR STRAW | APPLY WITH HYDROSEEDER IMMEDIATELY AFTER MULCHING. USE 500 LBS. WOOD FIBER PER ACRE. SOME PRODUCTS CONTAIN AN ADHESIVE MATERIAL ("TACKIFIER"), POSSIBLY ADVANTAGEOUS. |
| MULCH ANCHORING TOOL | HAY OR STRAW | APPLY MULCH AND PULL A MULCH ANCHORING TOOL (BLUNT, STRAIGHT DISCS) OVER MULCH AS NEAR TO THE CONTOUR AS POSSIBLE. MULCH MATERIAL SHOULD BE "TUCKED" INTO SOIL SURFACE ABOUT 3". |
| TACKIFIER | HAY OR STRAW | MIX AND APPLY POLYMERIC AND GUM TACKIFIERS ACCORDING TO MANUFACTURER'S INSTRUCTIONS. AVOID APPLICATION DURING RAIN. A 24-HOUR CURING PERIOD AND A SOIL TEMPERATURE HIGHER THAN 45° FAHRENHEIT ARE REQUIRED. |

7. INSTALL PERMANENT RIP-RAP AT ALL PIPE END SECTIONS AT TIME OF INSTALLATION OF PIPE.

8. DURING EXCAVATION OF TEMPORARY SEDIMENT BASIN, FIELD VERIFY A MINIMUM OF 2' SEPARATION DISTANCE FROM GROUND WATER ELEVATION TO SURFACE SAND FILTERS WITH AN IMPERMEABLE BOTTOM AND 3' WITH A PERMEABLE BOTTOM. NOTIFY ENGINEER IMMEDIATELY IF THESE MINIMUM SEPARATION REQUIREMENTS DO NOT EXIST FOR ALTERNATIVE MEANS OF STORMWATER POLLUTION PREVENTION.

9. SEE REMAINDER OF PLANS FOR PERMANENT IMPROVEMENTS. PERMANENT IMPROVEMENTS SHOWN ON THIS PLAN ARE FOR REFERENCE ONLY.

10. PAVED AREAS ARE TO BE SWEPT DAILY TO REMOVE ANY SEDIMENT AND ALL NEWLY PAVED AREAS SHALL BE DIRECTED TO THE TEMPORARY OR FINAL SEDIMENT CONTROL BASINS.


INFOCUS ENGINEERING SERVICES
86-16 QUEENS BLVD SUITE Suite#205
ELMHURST, NEW YORK 11373
TEL.#: 718-233-2968
EMAIL: info@infocuspc.com www.infocuspc.com


NOTE:
INFOCUS WAS NOT RETAINED FOR ANY SUPERVISION OF THE ACTUAL CONSTRUCTION.

FOR OFFICE USE

| DATE | DESCRIPTION |
|---|---|
| 02/24/22 | RESUBMISSION |

DOB JOB #'s:

Project location:
242 SPRUCE STREET
ALBANY, NY 12210

Project owner and address:
PROPOSED MULTI DWELLINGS RESIDENCE

Project name/description:

Drawing name:
SITE PLANS DETAILS

seal and signature:

| | |
|---|---|
| Date | 04-15-2021 |
| Project no: | 2012-03 |
| drawn by: | M.D. |
| chk by: | W.C. |
| Dwg. no: | C-300.00 |
| CAD FILE #: | PAGE #: 3 of 8 |

COPYRIGHT 2021 BY: INFOCUS