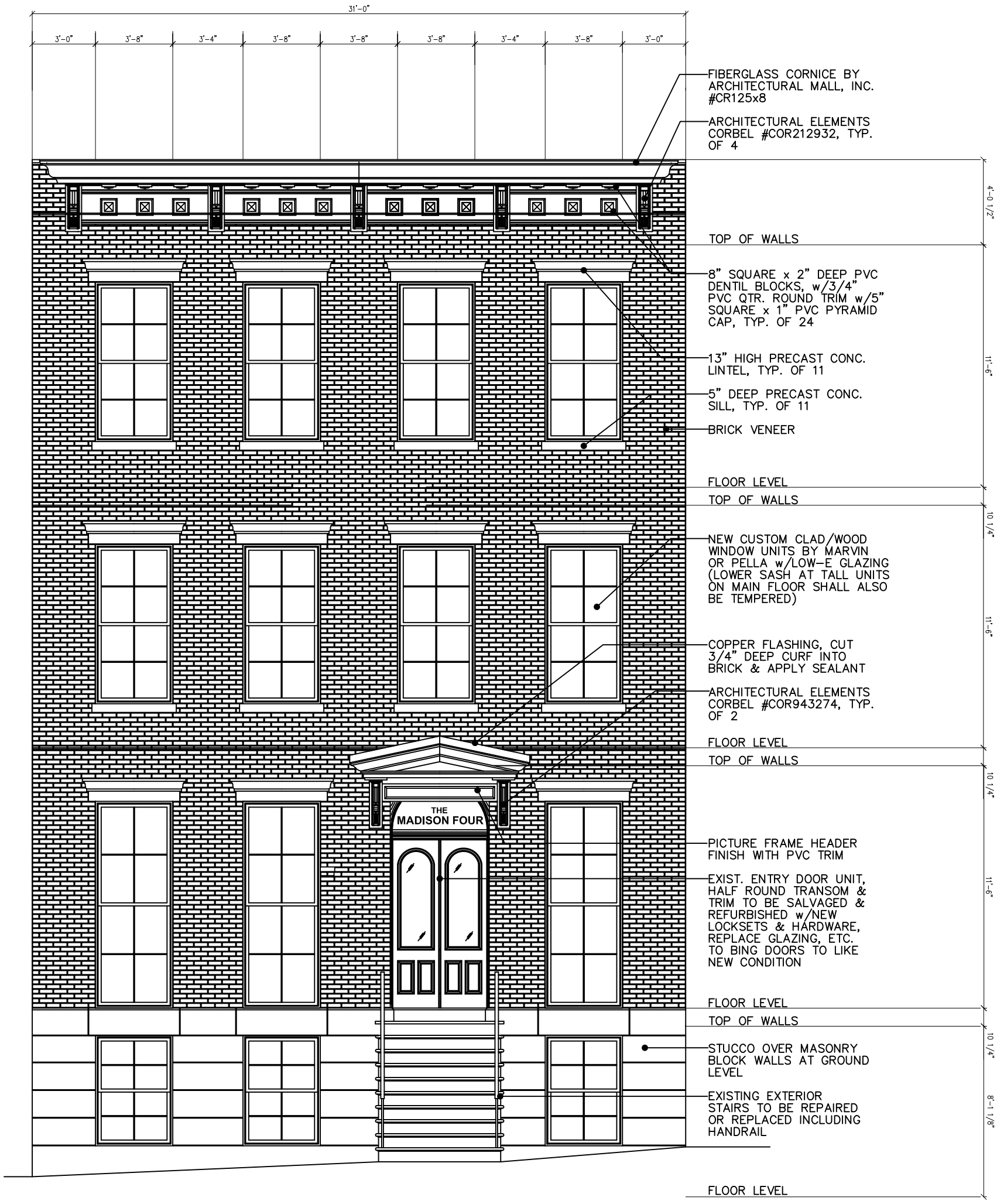

1 / A-1 PROPOSED FRONT ELEVATION
SCALE: 3/8" = 1'-0"

DRAWING NUMBER	A-1
DRAWING NAME:	PROPOSED ELEVATION
SCALE:	24x36 - AS NOTED 11x17 - NOTED / 2
APPROVED BY:	ES
DRAWN BY:	CJL
DATE :	FEB-14-18
ENGINEERS APPROVAL	

BUILDING RESTORATION
AT
4 Madison Avenue
Albany,NY

PREPARED BY:
SOFIA ENGINEERING, PLLC
11 Hebert Drive
Latham,NY 12110
Phone: (518)424-6599
e.mail: enzo.sofia@gmail.com

REVISIONS

REV.	DATE	REVISION	BY

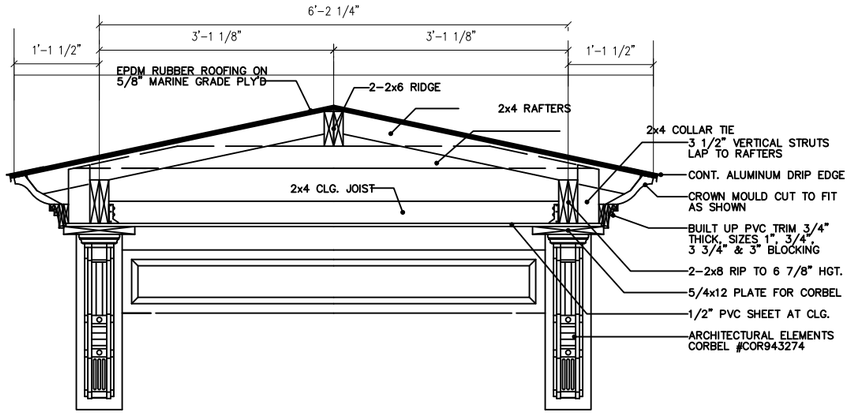

1 / A-2 SECTION THROUGH DOOR PEDIMENT

SCALE: 1" = 1'-0"

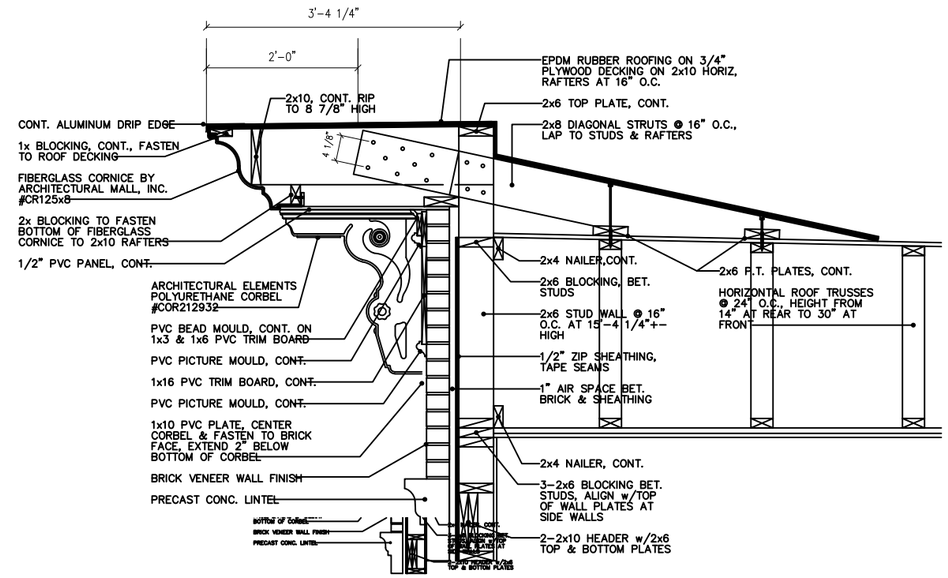

2 / A-2 CORNICE SECTION w/ CORBEL

SCALE: 1" = 1'-0"

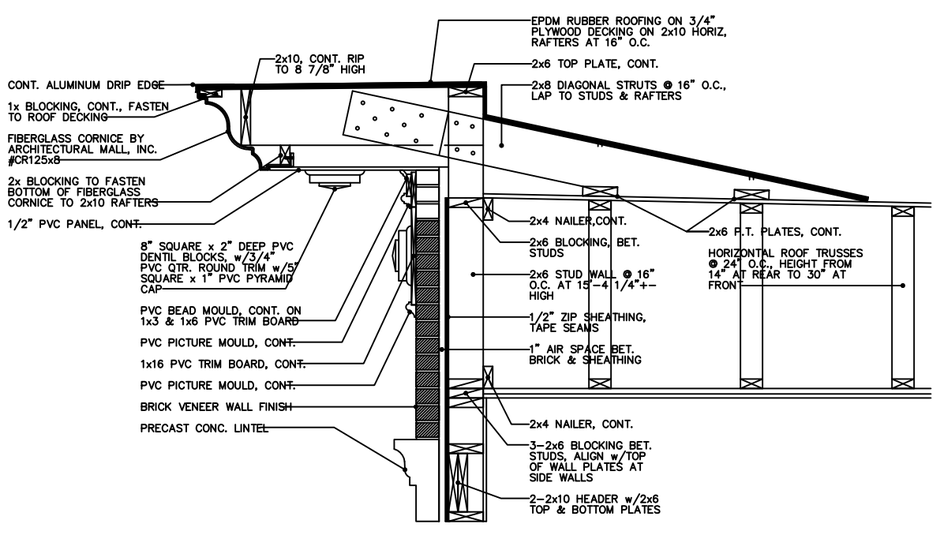

3 / A-2 CORNICE SECTION w/o CORBEL

SCALE: 1" = 1'-0"

REVISIONS

REV.	DATE	REVISION	BY

PREPARED BY:
SOFIA ENGINEERING, PLLC
11 Hebert Drive
Latham,NY 12110
Phone: (518)424-6599
e.mail: enzo.sofia@gmail.com

BUILDING RESTORATION
AT
4 Madison Avenue
Albany,NY

ENGINEERS APPROVAL

DATE : FEB-14-18

DRAWN BY: CJL.

APPROVED BY: ES

SCALE:
24x36 - AS NOTED
11x17 - NOTED / 2

DRAWING NAME: DETAILS

DRAWING NUMBER

A-2